CSE 3107: Data Communication

Chapter 1 – Introduction (Extended)

Data Communication

- *The term telecommunication means communication at a distance.*
- *The word data refers to information presented in whatever form is agreed upon by the parties creating and using the data.*
- *Data communications are the exchange of data between two devices via some form of transmission medium such as a wire cable.*
- *Effectiveness depends on:*
  - *Delivery*
  - *Accuracy*
  - *Timeliness*

Data Communication Cont.

- ***Delivery:*** *The system must deliver data to the correct destination. Data must be received by the intended device or user and only by that device or user.*
- ***Accuracy:*** *The system must deliver data to the correct destination. Data must be received by the intended device or user and only by that device or user.*
- ***Timeliness:*** *The system must deliver data in a timely manner. Data delivered late are useless. In the case of video, audio and voice data, timely delivery means delivering data as they are produced, in the same order that they are produces and without significant delay. This kind of delivery is called real-time transmission.*

Communication System Components

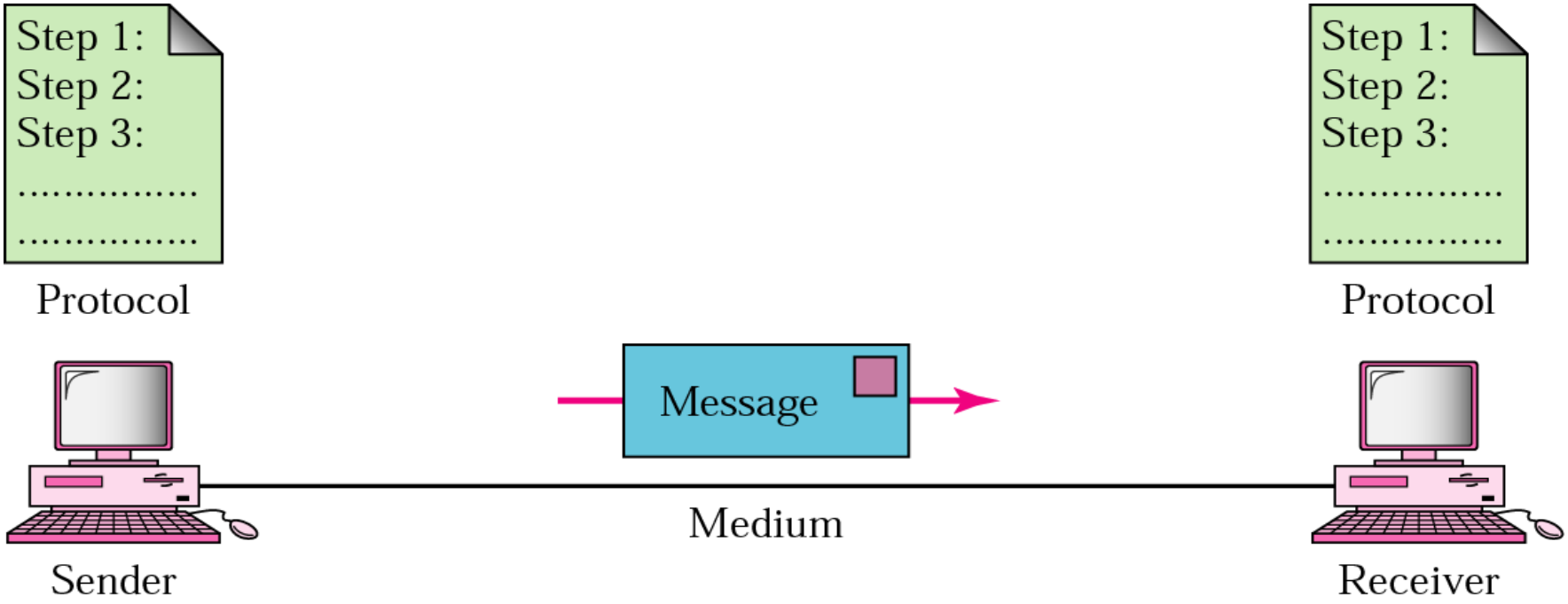

Communication System Components Cont.

- ***Message**: The message is the information (data) to be communicated. Popular forms of information include text, numbers, pictures, audio, and video.*
- ***Sender:** The sender is the device that sends the data message. It can be a computer, workstation, telephone handset, video camera, and so on.*
- ***Receiver:** The receiver is the device that receives the message. It can be a computer, workstation, telephone handset, television, and so on.*

Communication System Components Cont.

- ***Transmission medium:*** *The transmission medium is the physical path by which a message travels from sender to receiver. Some examples of transmission media include twisted-pair wire, coaxial cable, fiber-optic cable, and radio waves.*

- ***Protocol:*** *A protocol is a set of rules that govern data communications. It represents an agreement between the communicating devices. Without a protocol, two devices may be connected but not communicating, just as a person speaking French cannot be understood by a person who speaks only Japanese.*

Data Representation

- ***Text*** *– represented as a bit pattern, a sequence of bit (0s or 1s); codes often used: ASCII; Extended ASCII; Unicode*

- ***ASCII****, abbreviated from American Standard Code for Information Interchange, is a character-encoding scheme. Originally based on the English alphabet, it encodes 128 specified characters into 7-bit binary integers. The characters encoded are numbers 0 to 9, lowercase letters a to z, uppercase letters A to Z, basic punctuation symbols, control codes that originated with Teletype machines, and space.*

Data Representation

- ***Extended ASCII*** *is eight-bit or larger character encodings that include the standard seven-bit ASCII characters as well as others.*
- *Today, the prevalent coding system is called* ***Unicode****, which uses 32 bits to represent a symbol or character used in any language in the world. ASCII now constitutes the first 127 characters in Unicode and is also referred to as* ***Basic Latin****.*
- ***Numbers*** *– represented by binary equivalent*
- ***Images*** *– bit patterns representing pixels*
- ***Audio***
- ***Video***

Simplified Data Communications Model

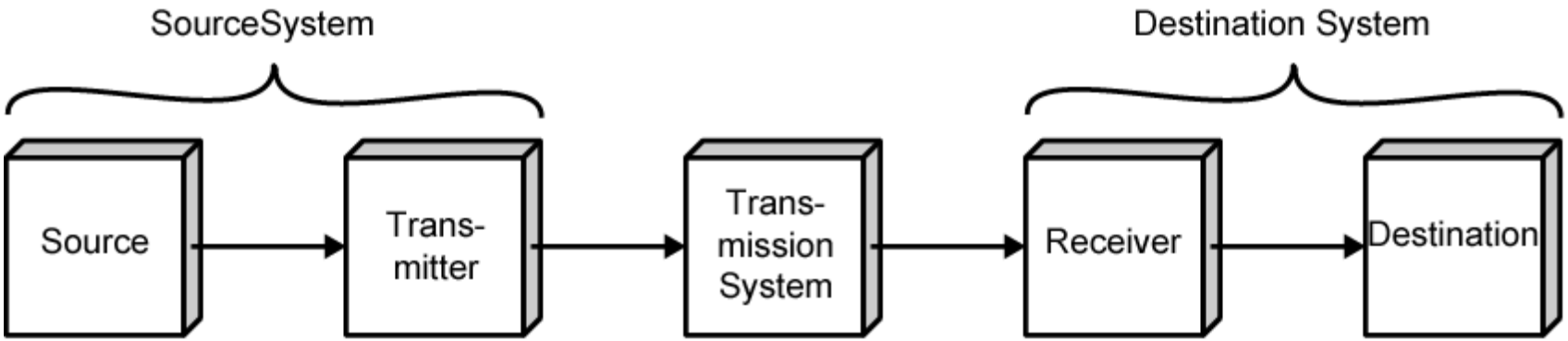

(a) General block diagram

(b) Example

Simplified Data Communications Model

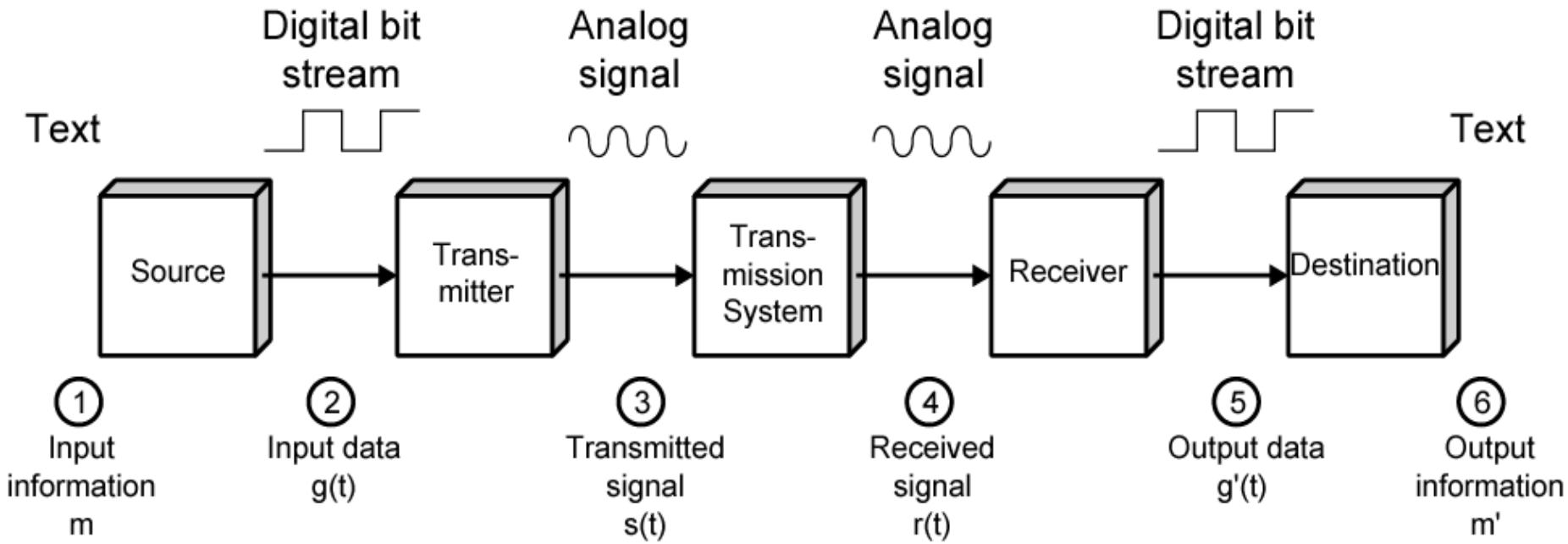

Functional Elements of Communication System:

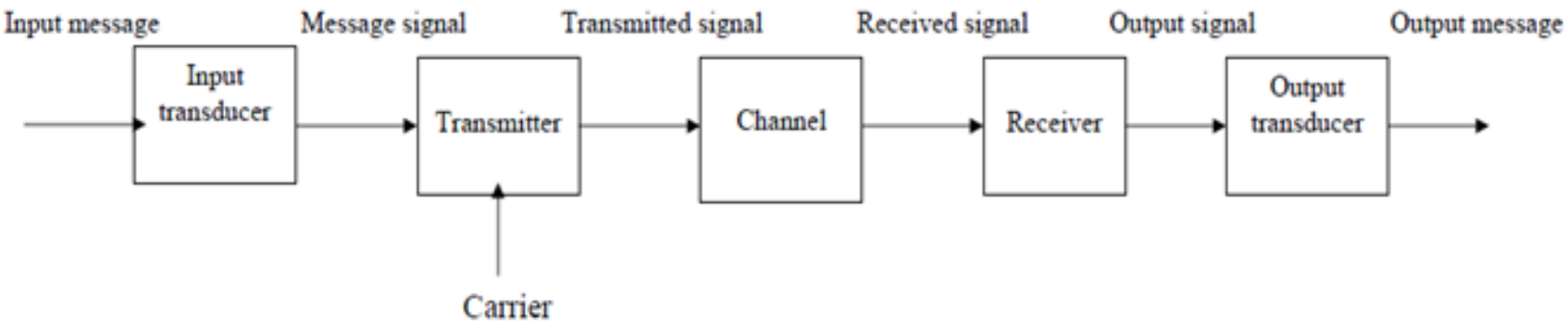

Regardless of the particular application and configuration, all information transmission systems involve three major subsystems:

- *a transmitter*
- *the channel*
- *and a receiver*

Functional Elements of Communication System:

- ***Input Transducer:***

The wide variety of possible sources of information results in many different forms for messages. Messages may be analog or digital. The message produced by a source must be converted by a transducer to a form suitable for the particular type of communication system employed .For example, in electrical communications, speech waves are converted by a microphone to voltage variations .Such a converted message is referred to as the message signal .

Functional Elements of Communication System:

- ***Transmitter:***

The purpose of the transmitter is to couple the message to the channel. It is often necessary to modulate a carrier wave with the signal from the input transducer. Modulation is the systematic variation of some attribute of the carrier, such as amplitude, phase, or frequency, in accordance with a function of the message signal.

Functional Elements of Communication System:

- ***Channel:***

- *The channel can have many different forms; the most familiar is the channel that exists between the transmitting antenna of a commercial radio station and the receiving antenna of a radio. In this channel, the transmitted signal propagates through the atmosphere, or free space, to the receiving antenna. Other forms of channels are:*
- *Transmission lines (such as open two- wire systems and co-axial cables).*
- *Optical fiber channels.*
- *Guided electromagnetic – wave channels.*

Functional Elements of Communication System:

- ***Receiver:***

The receiver's function is to extract the desired message from the received signal at the channel output and to convert it to a form suitable for the output transducer. Although amplification may be one of the first operations performed by the receiver, where the received signal may be extremely weak, the main function of the receiver is to demodulate the received signal.

- ***Output Transducer:***

The output transducer completes the communication system. The device converts the electric signal at its input into the form desired by the system user. The most common output transducer is a loudspeaker. There are many other examples, such as tape recorders, personal computers, meters, and cathode – ray tubes.

Direction of flow

- *Communication between two devices can be simplex, half-duplex, or full-duplex.*
- ***Simplex Mode***

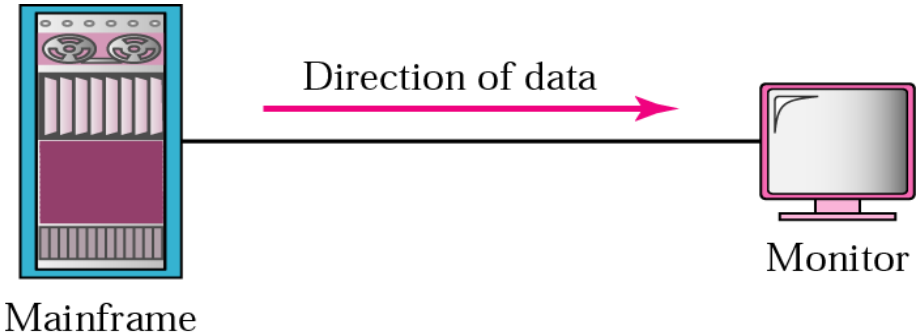

•*The communication is unidirectional, as on a one-way street.*

•*Only one of the two devices on a link can transmit; the other can only receive.*

•*Keyboards and traditional monitors are examples of simplex devices. The keyboard can only introduce input; the monitor can only accept output.*

•*The simplex mode can use the entire capacity of the channel to send data in one direction.*

Direction of flow Cont.

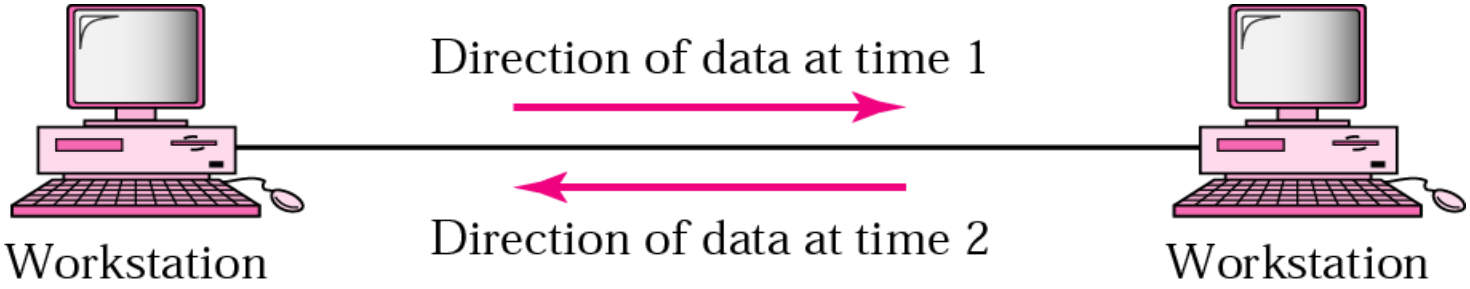

Half-Duplex Mode

•*In half-duplex mode, each station can both transmit and receive, but not at the same time. When one device is sending, the other can only receive, and vice versa.*

•*In a half-duplex transmission, the entire capacity of a channel is taken over by whichever of the two devices is transmitting at the time.*

•*Walkie-talkies and CB (citizens band) radios are both half-duplex systems*

Direction of flow Cont.

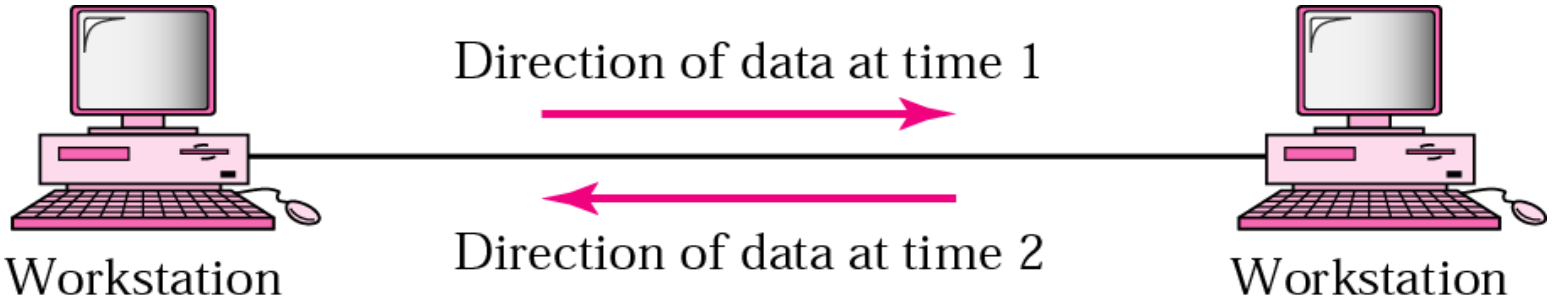

Duplex Mode

•*In full-duplex mode, both stations can transmit and receive simultaneously.*

•*In full-duplex mode, signals going in one direction share the capacity of the link: with signals going in the other direction.*

•*This sharing can occur in two ways: Either the link must contain two physically separate transmission paths, one for sending and the other for receiving; or the capacity of the channel is divided between signals travelling in both directions*

Line Configuration

- *Line configuration refers to the way two or more communication devices attach to a link.*

- *A link is the physical communication pathway that transfers data from one device to another.*

- *There are two possible types of connections:*

  - ❑*point-to-point and*
  - ❑*multipoint.*

Line Configuration Cont.

•***Point-to-Point:*** *A point-to-point connection provides a dedicated link between two devices. The entire capacity of the link is reserved for transmission between those two devices. Most point-to-point connections use an actual length of wire or cable to connect the two ends, but other options, such as microwave or satellite links, are also possible. When you change television channels by infrared remote control, you are establishing a point-to-point connection between the remote control and the television's control system.*

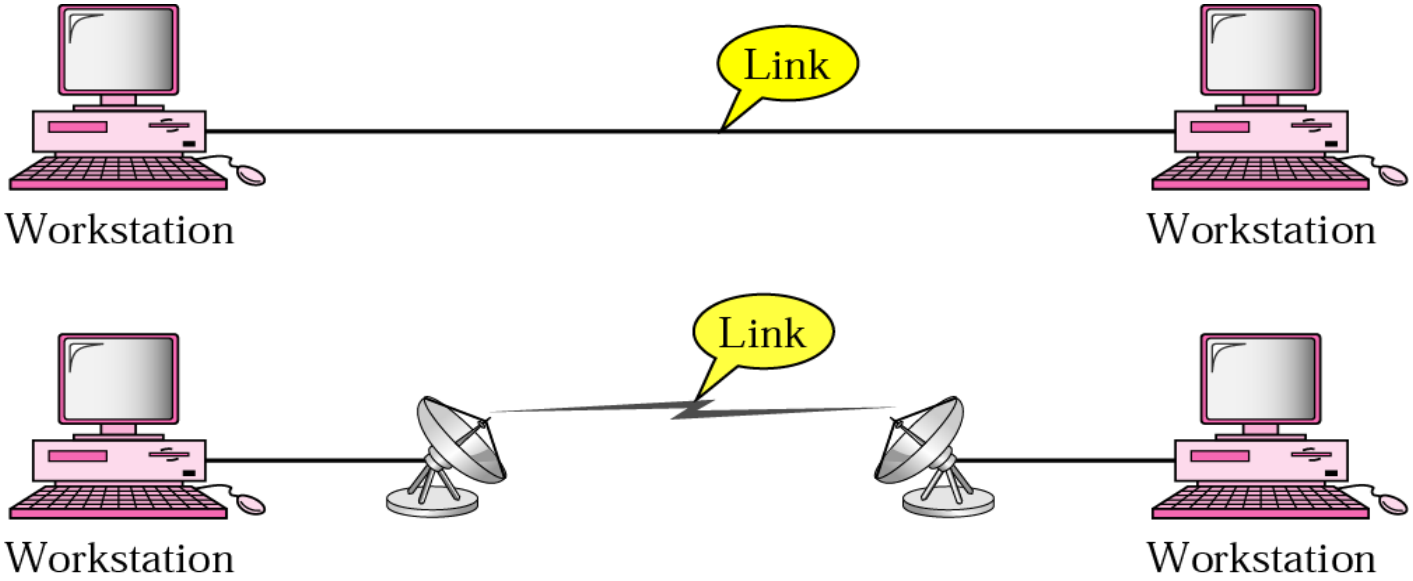

Line Configuration Cont.

•***Multipoint:*** *A multipoint connection is one in which more than two specific devices share a single link. In a multipoint environment, the capacity of the channel is shared.*

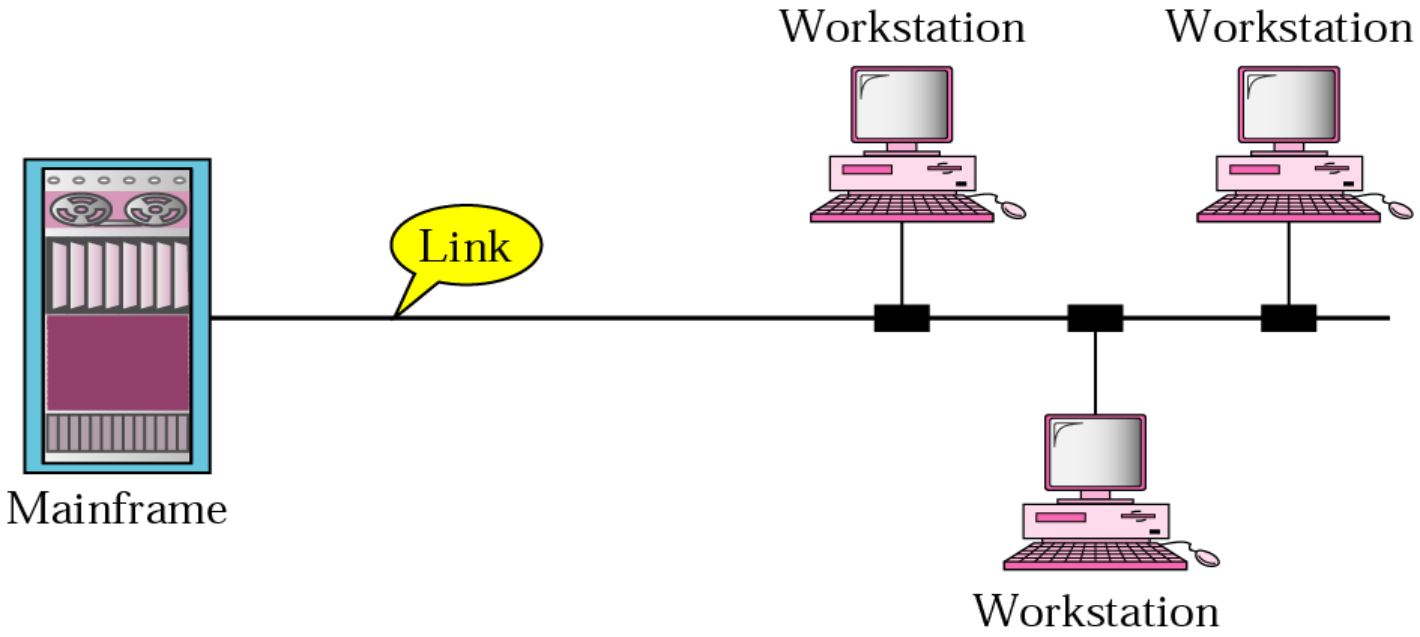

Physical Topology

- *The term physical topology refers to the way in which a network is laid out physically.*
- *Two or more devices connect to a link; two or more links form a topology.*
- *The topology of a network is the geometric representation of the relationship of all the links and linking devices (usually called nodes) to one another.*
- *There are four basic topologies possible: mesh, star, bus, and ring.*

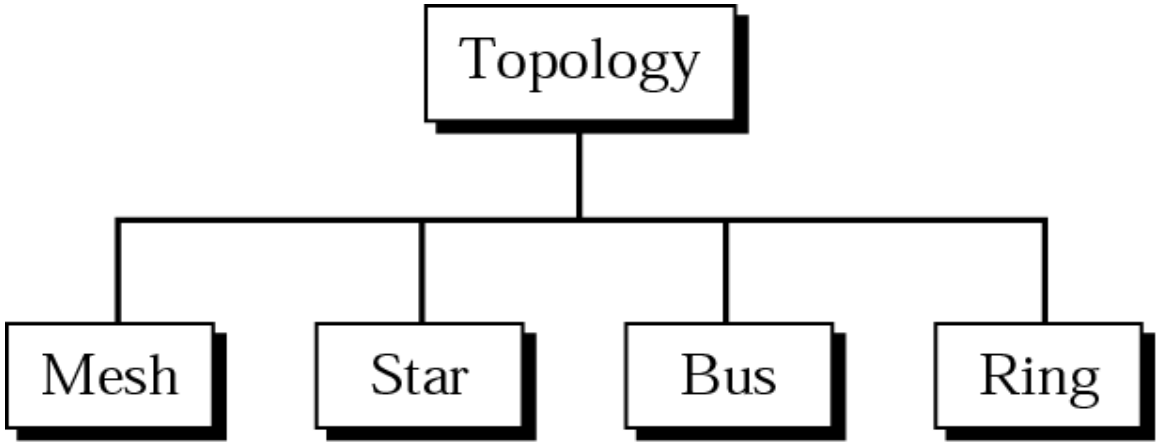

Mesh Topology

- *Dedicated point-to-point links to every other device*
- *Has n(n-1)/2 physical channel to link n devices (Show it → Home work)*
- *Devices have n-1 (I/O) ports.*

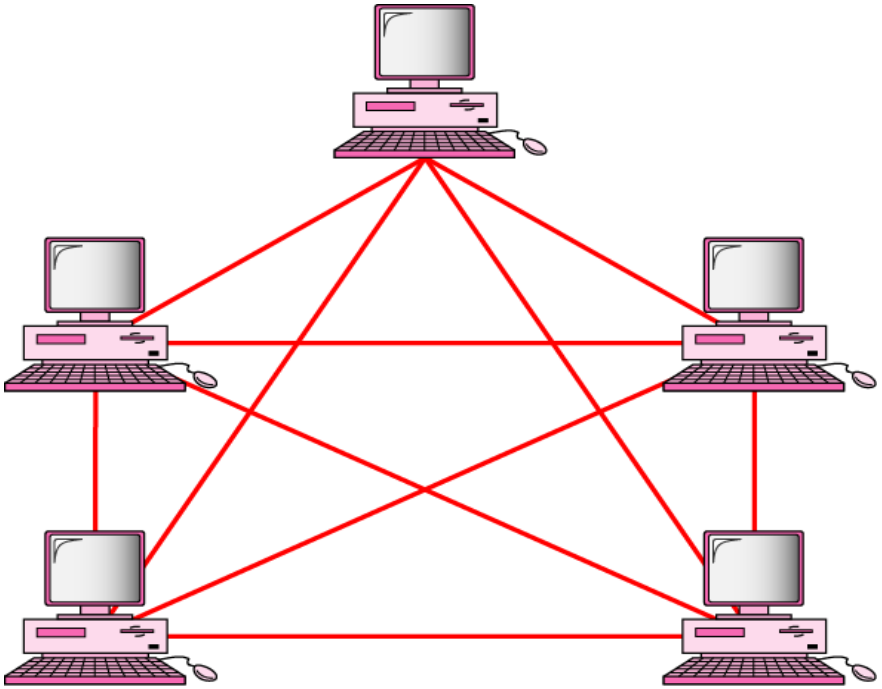

Mesh Topology-advantages and disadvantages

- *Each connection can carry its own data load.*

- *A mesh topology is robust. If one link becomes unusable it does not effect the whole system.*

- *Another advantage is privacy and security. When every message sent travels along a dedicated line, only the intended recipient see it.*

- *Point to point link makes fault identification and fault isolation easy.*

- *The main disadvantages of the mesh are related to the amount of cabling and number of I/O ports required.*

Star Topology

- *Dedicated point-to-point links to central controller (hub)*
- *Controller acts as exchange*

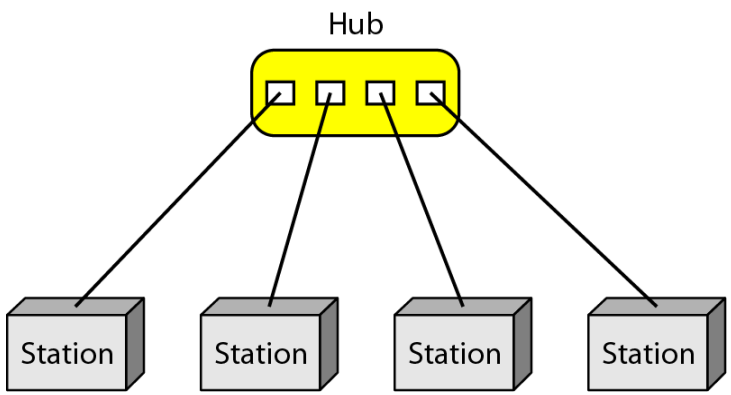

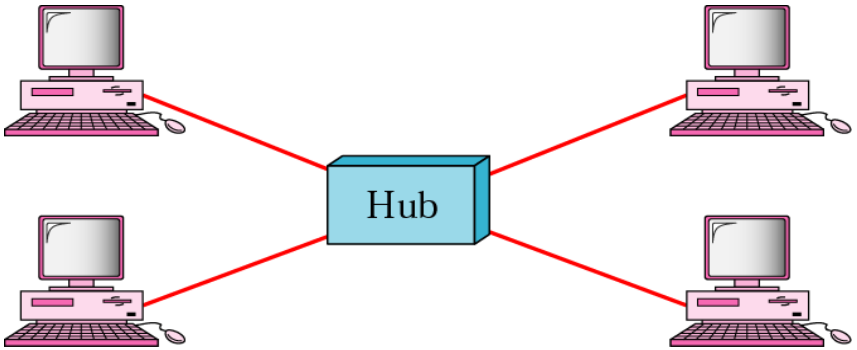

Star Topology-advantages and disadvantages

- *A star topology is less expensive than a mesh topology. This is because each device needs only one link and I/O port to connect it to any number of others. Far less cabling is required.*

- *Easy to install and configure.*

- *Other advantage includes robustness. If one link is failed only that link is affected.*

- *However although star topology requires less cabling than mesh topology, each node must be connected to a central hub. For this reason more cabling is required in a star than in some other topologies (such as ring or bus)*

Bus Topology

- *Multipoint configuration*
- *One cable acts as a backbone to link all devices*
- *Nodes are connected to the bus cable by drop lines and taps.*
- *A drop line is a connection running between the device and the main cable.*
- *A tap is a connector.*

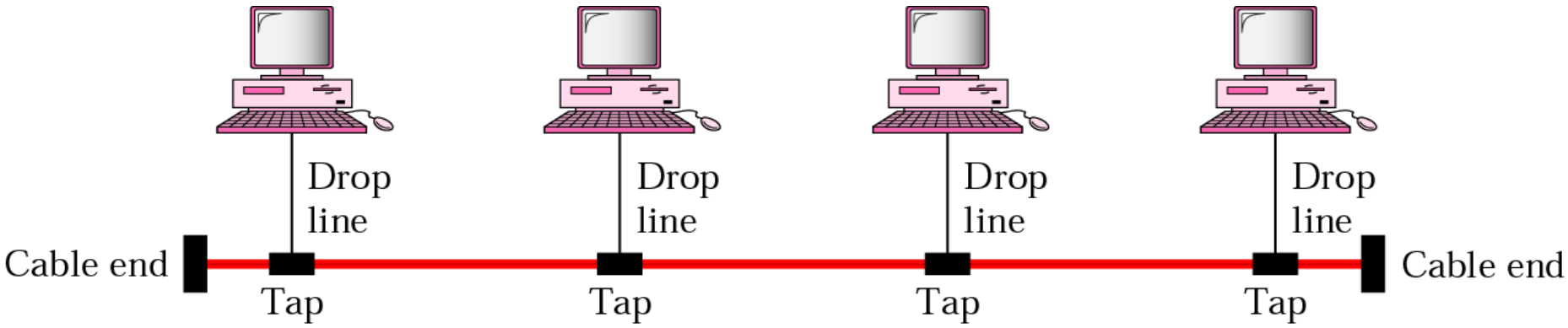

Bus Topology-advantages and disadvantages

- *Advantages of bus topology include ease of installation. Backbone cable can be laid along the most efficient path, then connected to nodes by drop lines of various lengths. In this way, a bus uses less cabling than mesh or star topologies.*

- *Disadvantages include difficult reconfiguration and fault isolation. A bus is usually designed to be optimally efficient at installation. It can therefore be difficult to add new devices. Adding new devices may therefore require modification or replacement of the backbone.*

- *In addition, a fault or break in the bus cable stops all transmission.*

Ring Topology

- *Dedicated point-to-point configuration to neighbors*
- *A signal is passed along the ring in one direction from device to device until it reaches destination*
- *Each device functions as a repeater*
- *When a device receives a signal intended for another device its repeater regenerates the bits and passes them along.*

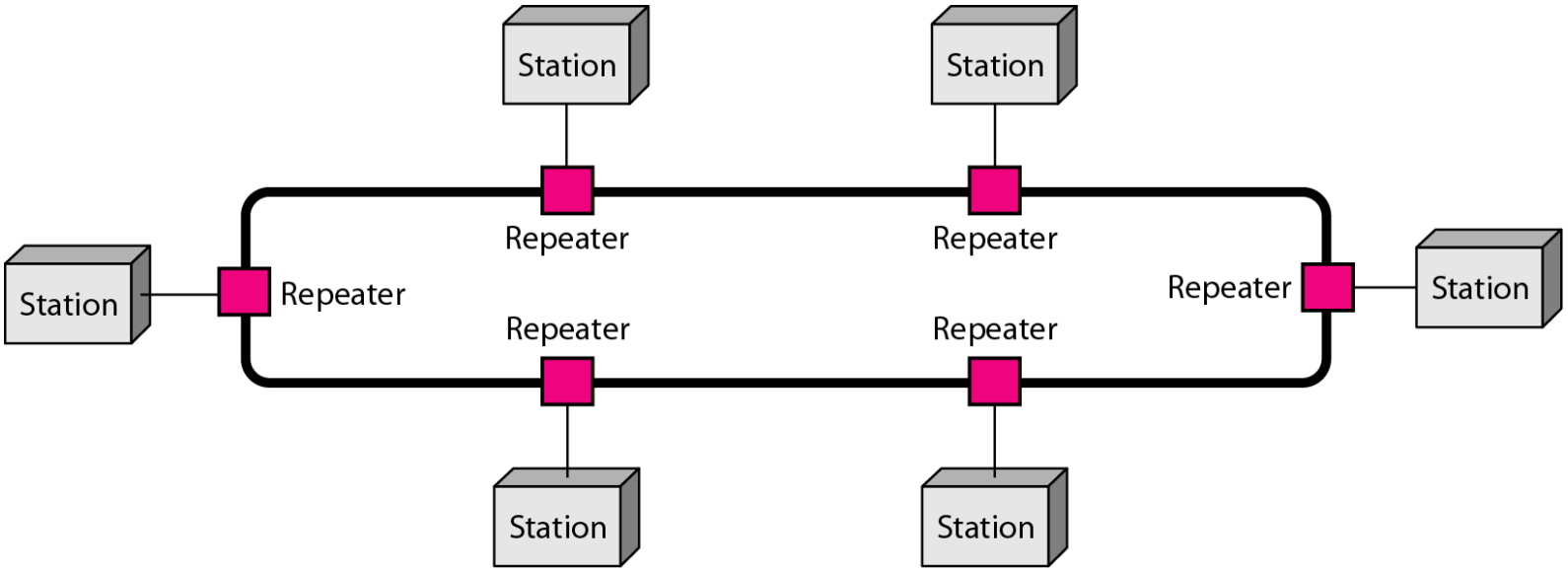

Ring Topology-advantages and disadvantages

- *A ring is relatively easy to install and reconfigure. Each device is linked only to its immediate neighbours . To add or delete a device requires moving only two connections. The only constraint is the maximum ring length and number of devices.*

- *Fault identification is simplified. Generally in ring a signal is circulating all times. If one device does not receive a signal within a specified period, it can issue an alarm.*

- *However, unidirectional traffic can be disadvantages. In a simple ring, a break in the ring can disable the entire network.*

Hybrid Topology

•*Often a network combines several topologies as subnetworks linked together in a large topology. For instance, one department of a business may have decided to use a bus topology while another department has a ring. The two can be connected to each other via a central controller in a star topology.*

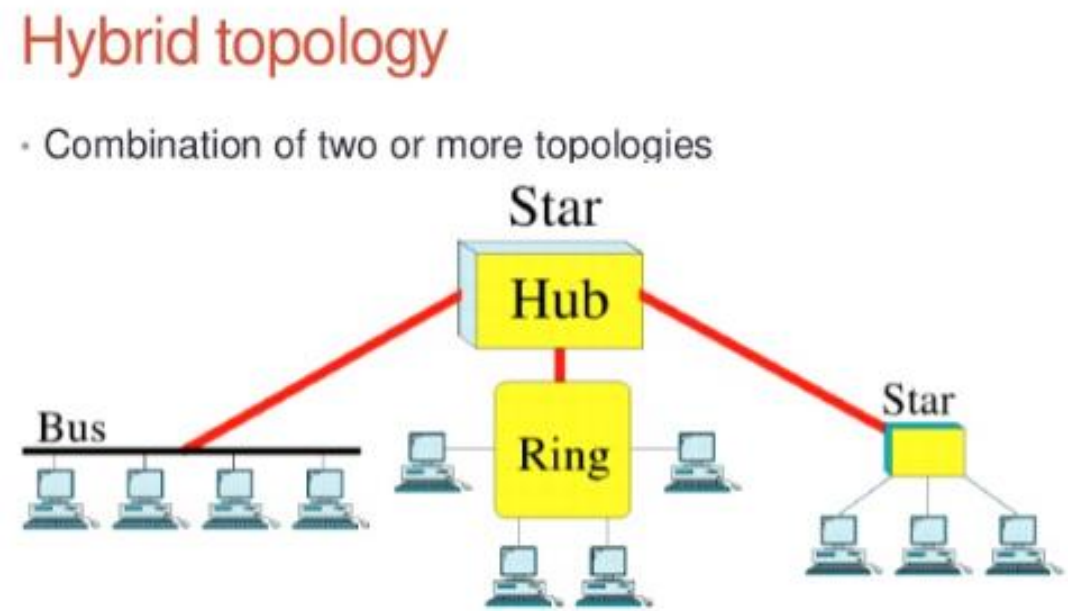

Categories of Networks

A network is a set of devices (often referred to as nodes) connected by communication links. A node can be a computer, printer, or any other device capable of sending and/or receiving data generated by other nodes on the network. A link can be a cable, air, optical fiber, or any medium which can transport a signal carrying information.

Local Area Network

- *Usually privately owned and links the devices in a single office, building, or campus*
- *LAN size is limited to a few kilometers.*
- *LANs are designed to allow resources to be shared (hardware , software and data)*
- *Today LANs have data rates of 100 Mbps to 10Gbps*
- *Backbone Networks (BN), have a scale of a few hundred meters to a few kilometers. Include a high speed backbone linking the LANs at various locations.*

Local Area Network (cont.)

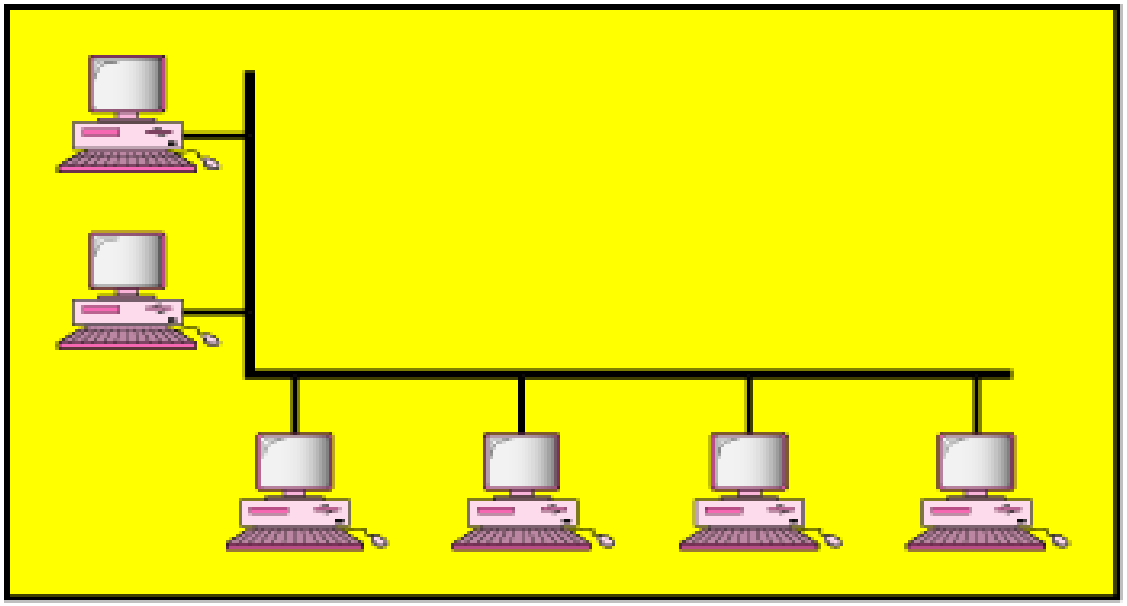

a. Single-building LAN

Local Area Network (cont)

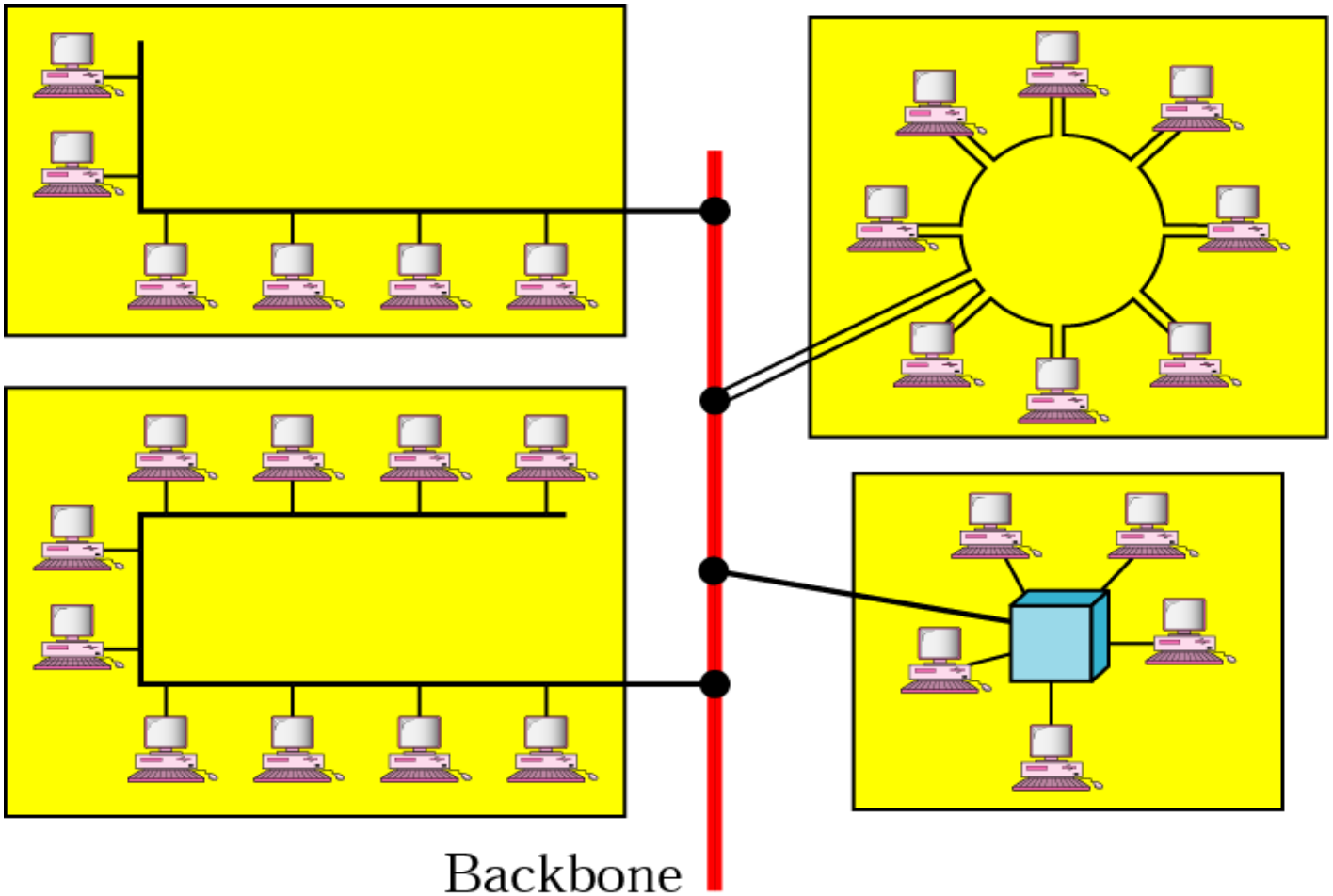

b. Multiple-building LAN

Metropolitan Area Network (MAN)

- *Designed to extend over an entire city.*
- *It may be a single network such as a cable television network.*
- *It may be a means of connecting a number of LANs into a larger network so that resources may be shared LAN-to-LAN as well as device to device.*
- *For example, a company can use a MAN to connect the LANs in all of its offices throughout a city.*

Metropolitan Area Network (MAN) Cont.

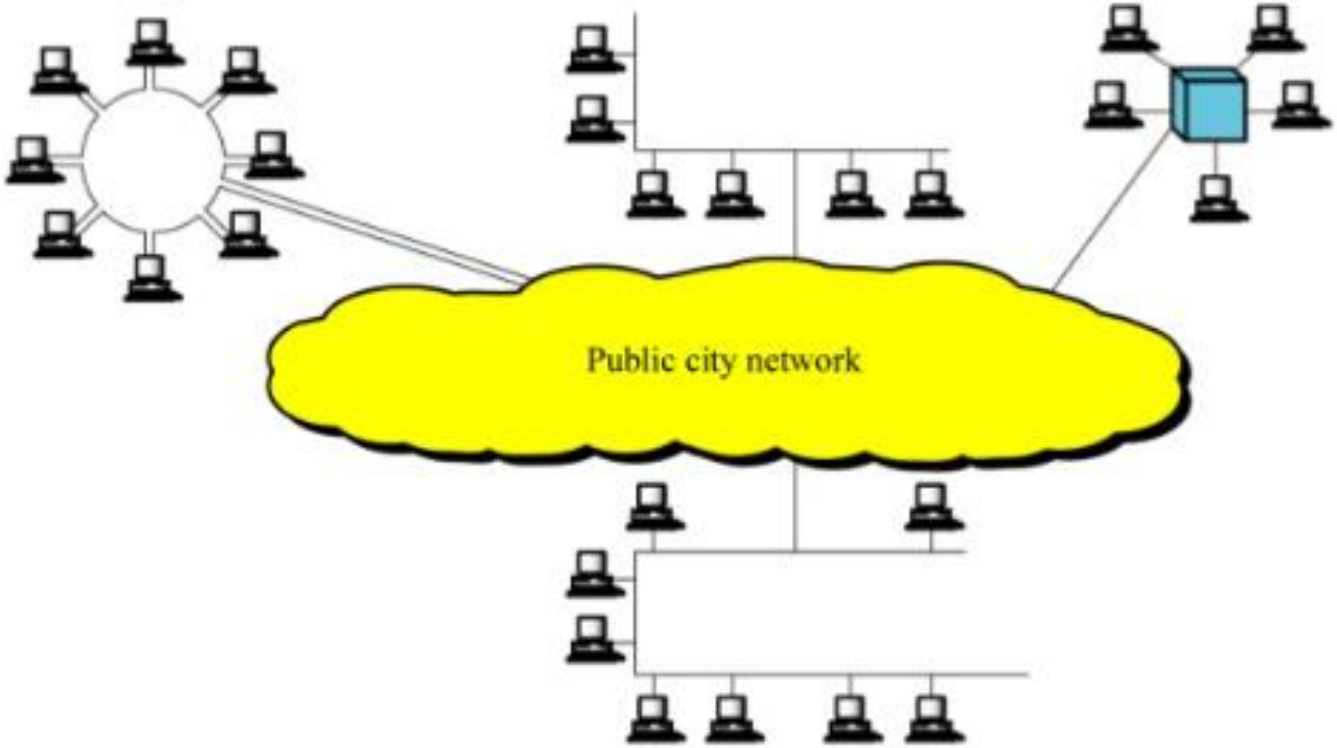

Wide Area Network

- *WAN provides long distance transmission of data, voice, image, and video information over large geographical areas*
- *Comprise a country, a continent, or even the whole world (Interlink age of many LANs and MANs)*
- *Low data transmission rate (below 1 Mbps)*
- *Unlimited number of miles example: Internet Network*

Wide Area Network

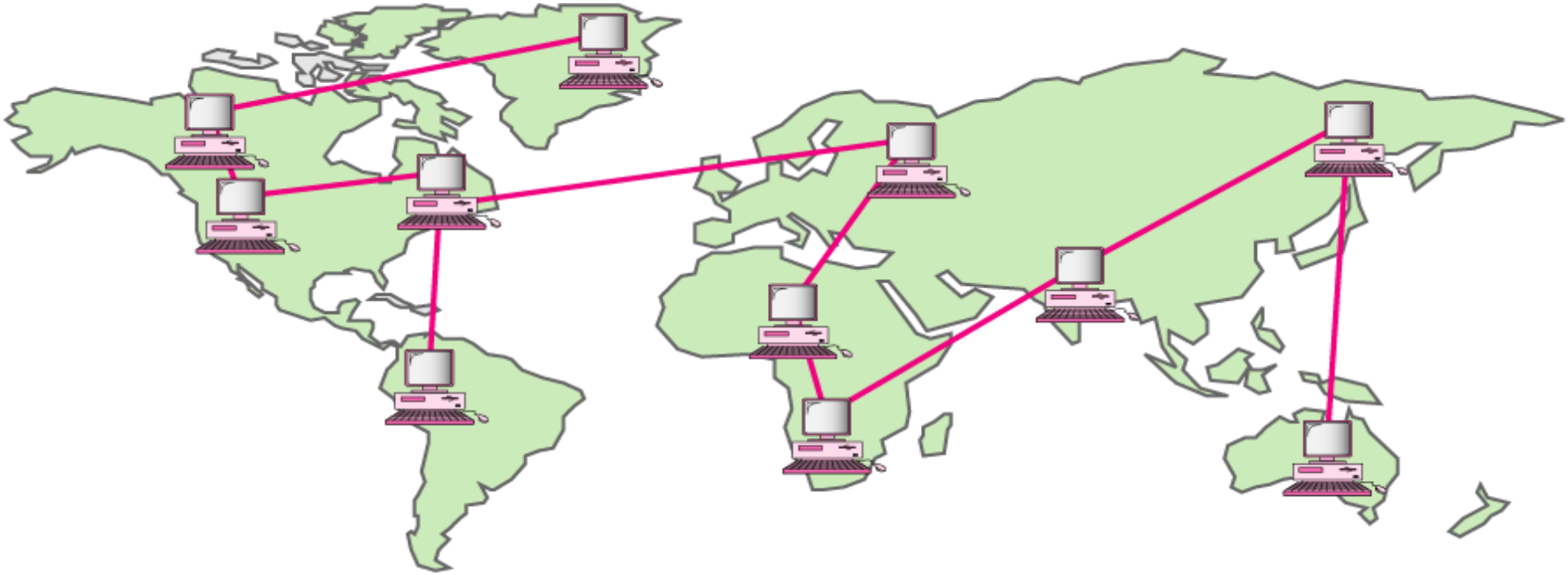

Internetworks

- *Connection of two or more networks by the use of internetworking devices which include routers and gateways*
- *The term internet (lowercase) is a generic term used to mean an interconnection of networks*
- *The Internet (uppercase) is the name of a specific worldwide network.*

Internetworks (cont)

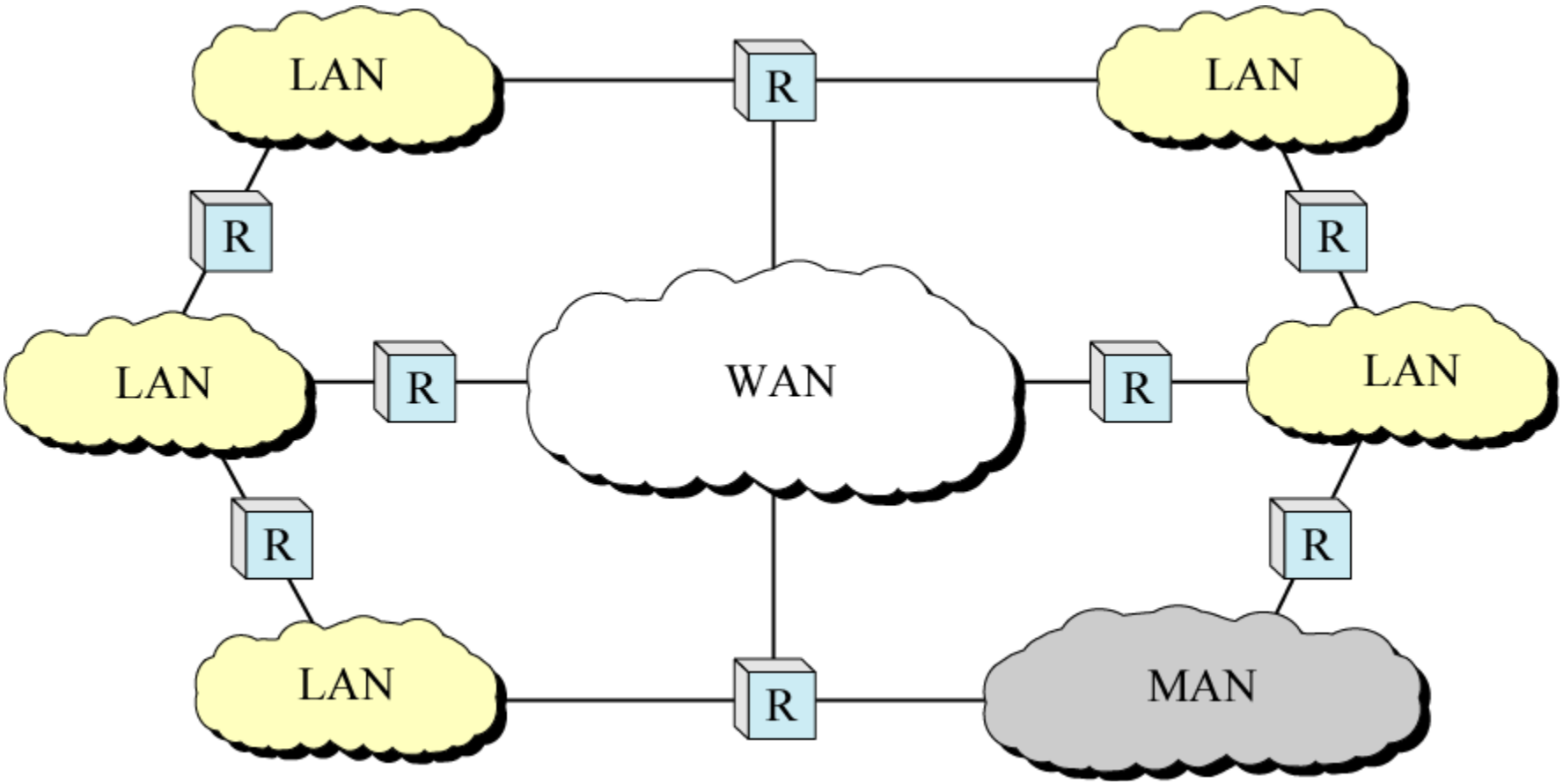

The Internet

- *Collaboration of more than hundreds of thousands interconnected networks*
- *1969 – started as ARPAnet, a small network of connected computers*
- *1972 - Cerf and Khan – packet delivery and Transmission Control Protocol (TCP)*
- *Shortly thereafter – evolution of TCP/IP*
- *History (Read it Yourself)*

The Internet today

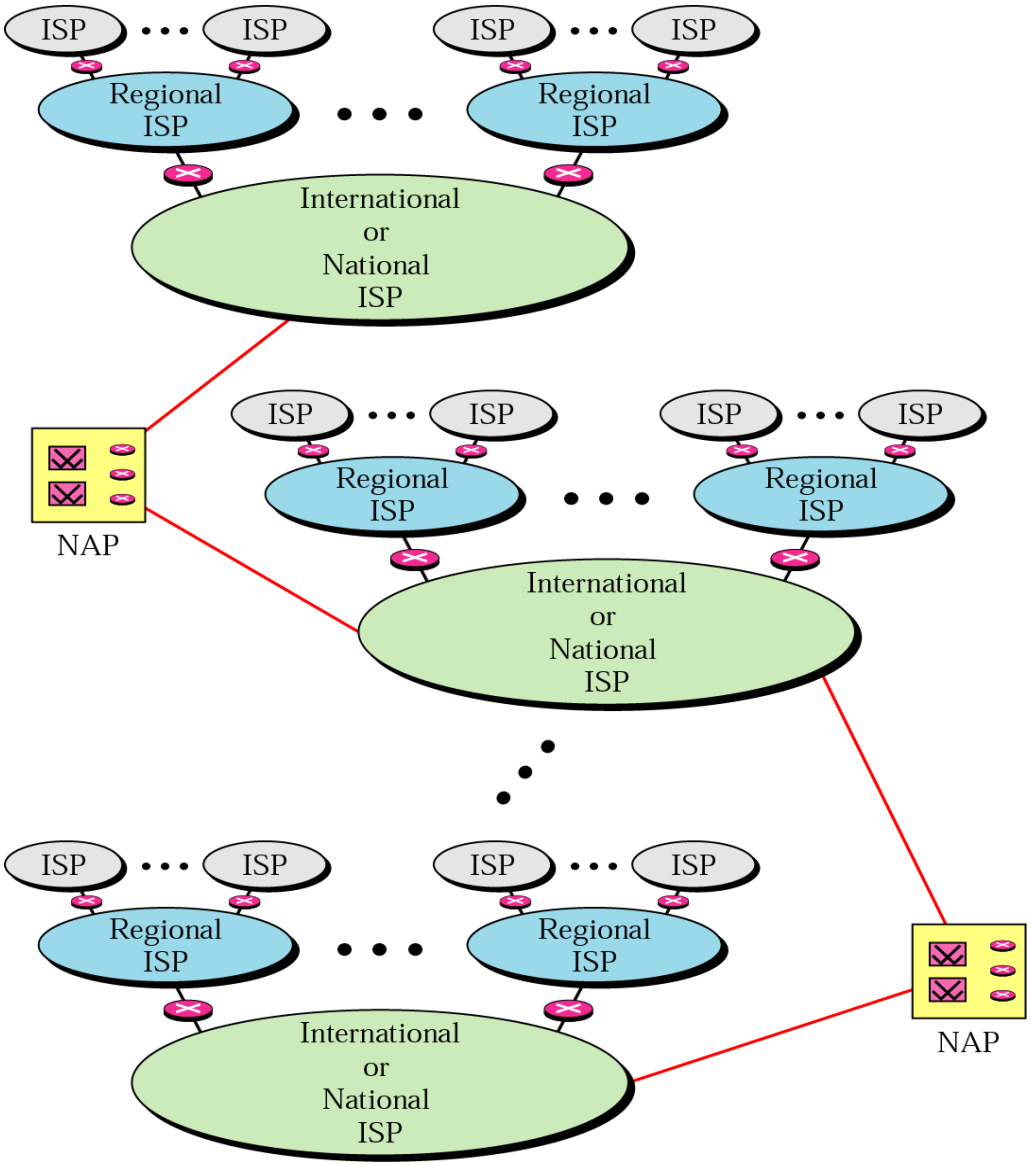

Protocols

- *In computer networks, communication occurs between entities in different systems.*
- *An entity is anything capable of sending or receiving information. Examples include application programs, file transfer packages, database management systems and electronic mail software.*
- *A system is a physical object that contains one or more entities. Examples include computers and terminals.*

Protocols Cont.

- *But two entities cannot just send bit streams to each other and expect to be understood.*
- *For communication to occur, the entities must agree on a protocol.*
- *As defined before a protocol is a set of rules that govern data communication.*
- *A protocol defines what is communicated, how it is communicated, when it is communicated.*

Protocols Cont.

The key elements of a protocol are Syntax, Semantics and Timing.

Syntax: Syntax refers to the structure or format of the data, meaning the order in which they are presented. For example, a simple protocol might expect the first eight bits of data to be the address of the sender, the second eight bits to be the address of the receiver and the rest of the stream to be the message itself.

Semantics: Semantics refers to the meaning of each section of bits. How is a particular pattern to be interpreted and what action is to be taken based on that interpretation? For example, identify the route to be taken or the final destination of the message.

Protocols Cont.

Timing: Timing refers to two characteristics: when data should be sent and how fast they can be sent. For example, if a sender produces data at 100 Mbps but the receiver can produce data at only 1 Mbps, the transmission will overload the receiver and data will be largely lost.

Standards

Standards are necessary to ensure that products from different manufacturers can work together as expected.

Standards are essential in creating and maintaining an open and competitive market for equipment manufacturers and in guaranteeing national and international interoperability of data and telecommunications technology and processes.

Types –

De jure (Formal) – legislated by an officially recognized body

De facto – by convention or widespread

Standards Organizations

Standards are developed by cooperation among standards creation committees, forums and government regulatory agencies.

<u>Standard Creation Committee</u>

- *The International Standards Organization (ISO)*
- *The International Telecommunications Union – Telecommunication Standards Sector (ITU-T)*
- *The American National Standards Institute (ANSI)*
- *The Institute of Electrical and Electronics Engineers (IEEE)*
- *The Electronic Industries Association (EIA)*

Standards Organizations Cont.

Forums

Telecommunications technology development is moving faster than the ability of standards committees to ratify standards. Standards committees are procedural bodies and by nature slow moving. To accommodate the need for working models and agreements and to facilitate the standardization process, many special interest groups have developed forums made up of representatives from interested corporations. The forums works with universities and users to test, evaluate and standardize new technologies. By concentrating their efforts on a particular technology the forums are able to speed acceptance and use of those technologies in the telecommunications community. The forums present their conclusions to the standards bodies.

Standards Organizations Cont.

Some important forums for the telecommunications industry include the following:

- *Frame Relay Forum*
- *ATM forum and ATM Consortium*
- *Internet Society (ISOC) and Internet Engineering Task Force (IETF)*

<u>Regulatory Agencies</u>

All communications technology is subject to regulation by government agencies such as Federal Communications Commission (FCC) in the United States.

The FCC has authority over interstate and international commerce as it relates to communications. Every piece of communications technology must have FCC approval before it may be marketed.